TOLERANCE								
10MAX	30MAX	50MAX	70MAX	100MAX	120MAX	250MAX	250VR	ANGLE
±0.15	±0.20	±0.30	±0.40	±0.50	±0.75	±0.9	±1.4	±0.5도

REV	REVISION RECORD	DATE	DRWN	CHKD	APVD
A	REVISED(RD-2016-36)	26.OCT.16	KH	–	SJ
B	REVISED(RD-2018-38)	08.MAY.18	TH	DR	MJ
C	REVISED(RD-2018-51)	02.JUL.18	TH	DR	MJ

CODE A

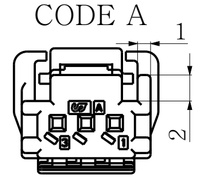

배율 3:1

CODE B

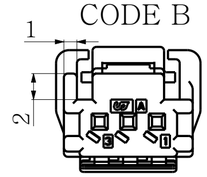

배율 3:1

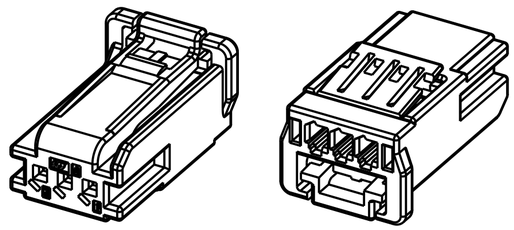

ISO VIEW

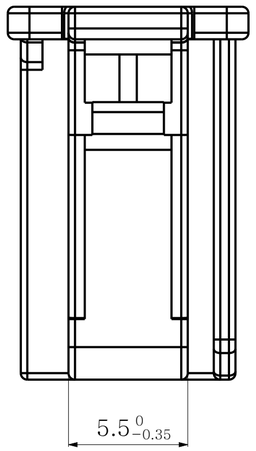

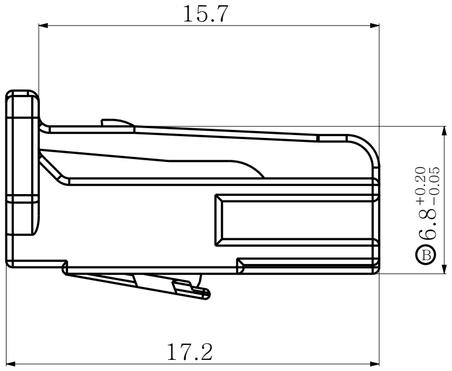

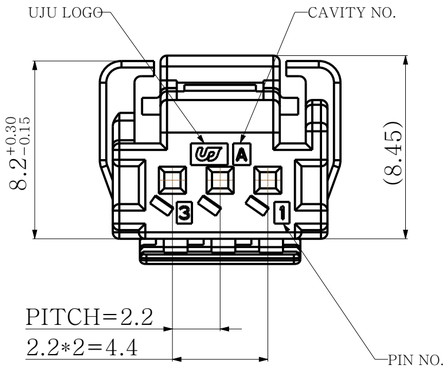

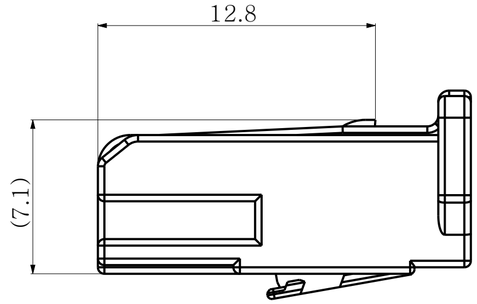

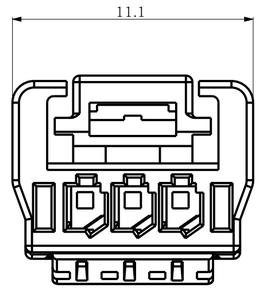

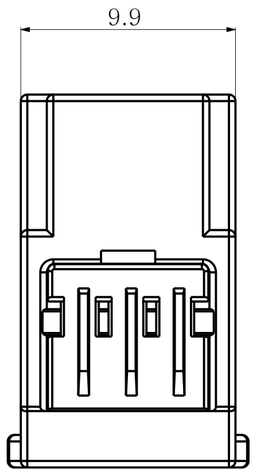

TPA LOCKING POSITION

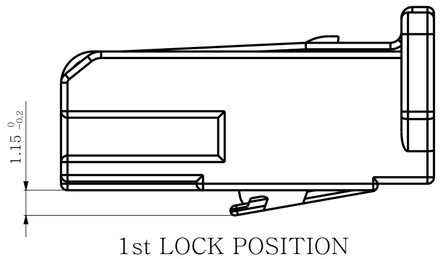

1st LOCK POSITION
(DELIVERY SHAPE FOR CUSTOMER)

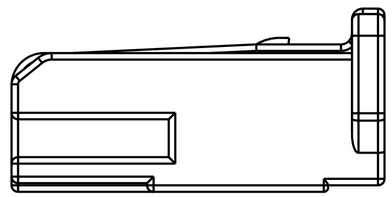

2nd LOCK POSITION

NOTE
1. GENERAL TOLERANCE : SEE TABLE TOLERANCE
2. DELICERY CONDITION : TPA FIRST LOCK POSITION
3. APPLICABLE RECEPTACLE TERMINAL : TABLE-2

TABLE 1

025 3F ASSY	KH1400041-21	B	PBT	BLACK
	KH1400041-10	A		NATURAL
DESCRIPTION	PART. NO.	CODE	MATERIAL	FINISH/COLOR

TABLE 2

025 FEMALE TERMINAL	KH1200031-21	0.3 ~ 0.5 SQ	Cu Alloy	Pre-TIN
	KH1200031-20	0.22 SQ	Cu Alloy	Pre-TIN
DESCRIPTION	PART. NO.	WIRE RANGE	MATERIAL	FINISH

TOLERANCES UNLESS OTHERWISE SPECIFIED: 0 ±, 0.0 ±, 0.00 ±, 0.000 ±, 0.0000 ±, ANGLES ±	UNIT: MM	DRWN: TH.LEE	(주)우주 일렉트로닉스 UJU Electronics co,.Ltd.
	THIRD ANGLE PROJECTION	CHKD: DR.KOO	NAME: 025 3F ASSY
		APVD: MJ.BANG	
		MATERIAL: SEE TABLE 1	
		FINISH/COLOR: SEE TABLE 1	CUSTOMER DRAWING
PRODUCT SPEC	APPLICATION SPEC	WEIGHT: 0.9g	DRAWING NO: KH1400041
			LOC / RESTRICTED TO / SIZE: A2 / SCALE: 5:1 / SHEET: 1 of 1 / REV: C

UAD-RD-0008 REV.0[201112]