REV	REVISION RECORD	DATE	DRWN	CHKD	APVD
1	ENGINEERING CONTROLED (RD-2021-095)	25JUN'21	JH	KH	CY

TPA LOCKING POSITION

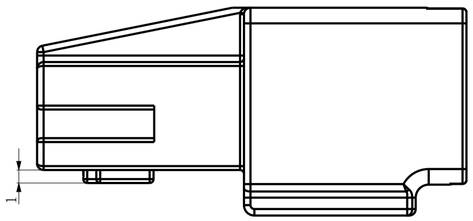

1st LOCK POSITION
(DELIVERY SHAPE FOR CUSTOMER)

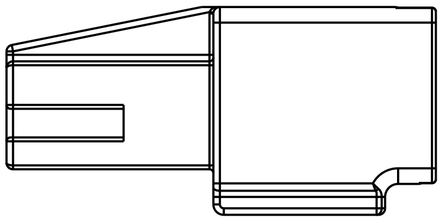

2nd LOCK POSITION

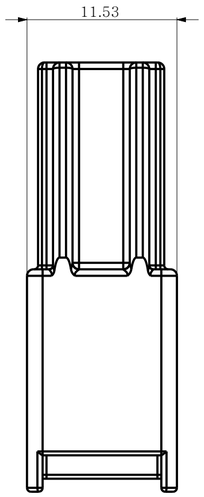

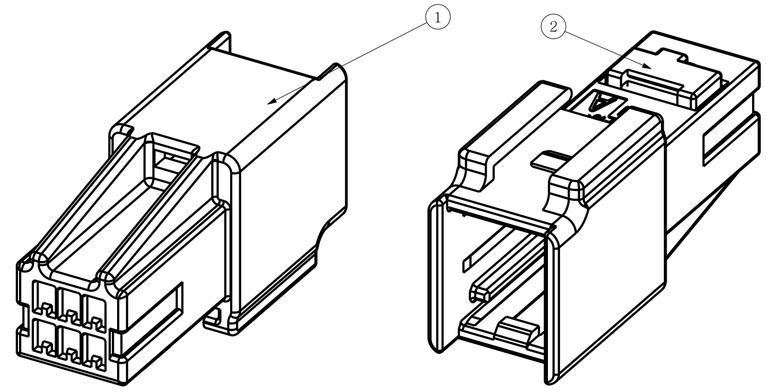

ISO VIEW
(SCALE 3:1)

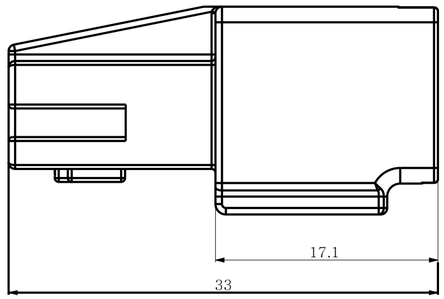

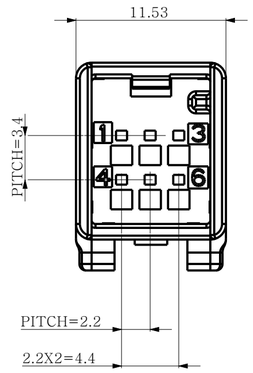

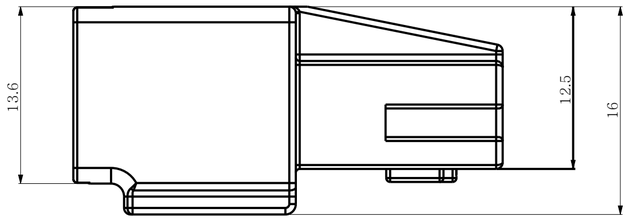

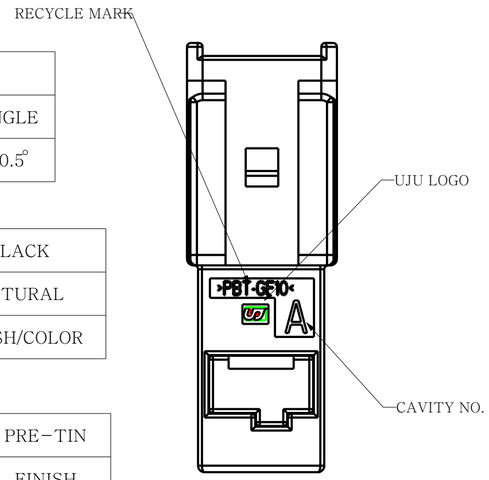

NOTE
1. GENERAL TOLERANCE : SEE TABLE TOLERANCE
2. DELIVERY CONDITION : TPA FIRST LOCK POSITION
3. HSG DESCRIPTION : SEE TABLE-1
4. APPLICABLE RECEPTACLE TERMINAL : TABLE-2
5. REFERENCE MATING CONNECTOR IS KH2000059

TOLERANCE								
10MAX	30MAX	50MAX	70MAX	100MAX	120MAX	250MAX	250VR	ANGLE
±0.15	±0.20	±0.30	±0.40	±0.50	±0.75	±0.9	±1.4	±0.5°

TABLE-1

025_II_6M_ASSY (BK)	KH2100046-20	-	PBT GF10	BLACK
025_II_6M_ASSY (NA)	KH2100046-10	-	PBT GF10	NATURAL
DESCRIPTION	PART NO.	CODE	MATERIAL	FINISH/COLOR

TABLE-2

025_II_MALE_TERMINAL(M)	KH2000017-21	0.3 ~ 0.5 SQ	COPPER ALLOY	PRE-TIN
DESCRIPTION	PART NO.	WIRE RANGE	MATERIAL	FINISH

NO.	DESCRIPTION	PART NO.	CODE	MATERIAL	FINISH/COLOR	Q'TY		
3	025_II_6M_TPA	KM2100048-30	-	PBT-GF10	GRAY	1	1	
2	025_II_6M_HSG (BK)	KM2100047-20	-	PBT-GF10	NATURAL	-	1	
1	025_II_6M_HSG (NA)	KM2100047-10	-	PBT-GF10	BLACK	1	-	
						025_II_10M_ASSY (BK)	KH2100046-20	-
						025_II_10M_ASSY (NA)	KH2100046-10	-
						ASSY DESCRIPTION	ASSY PART NO.	CODE

DRWN JH.RYU
CHKD KH.PARK
APVD CY.CHOI
MATERIAL SEE TABLE-1
FINISH/COLOR SEE TABLE-1
WEIGHT

(주)우주 일렉트로닉스
UJU Electronics co.,Ltd.

TOLERANCES UNLESS OTHERWISE SPECIFIED
0 ±
0.0 ±
0.00 ±
0.000 ±
0.0000 ±
ANGLES ±

UNIT MM
THIRD ANGLE PROJECTION

NAME 025_II_6M_ASSY

CUSTOMER DRAWING
DRAWING NO KH2100046

PRODUCT SPEC
APPLICATION SPEC
LOC
RESTRICTED TO
SIZE A2
SCALE 3:1
SHEET 1 OF 1
REV 1

UAD-RD-0008 REV.0[201112]